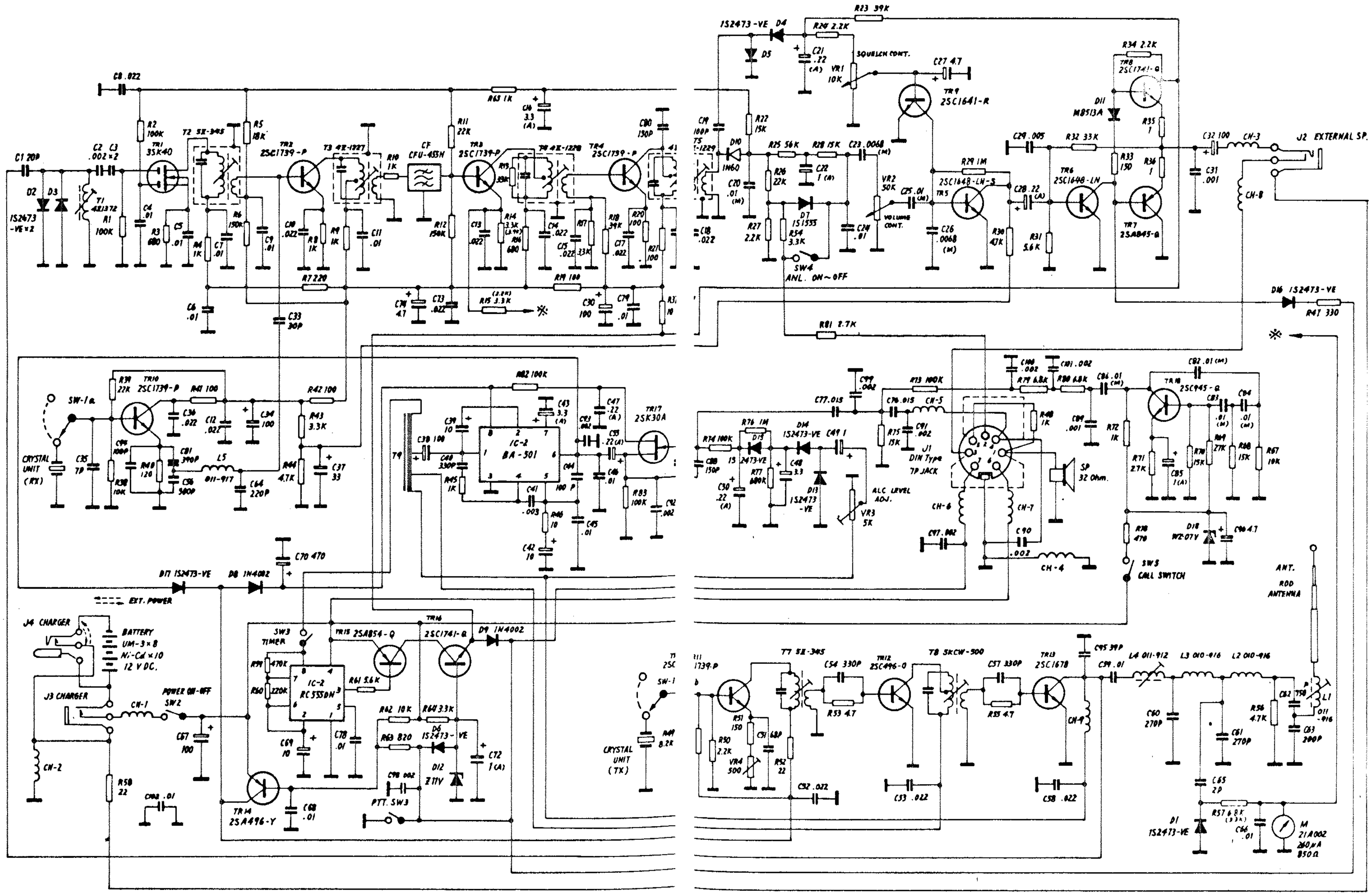
SQUELCH CONT.
VOLUME CONT.
SW4 ANL. ON~OFF
ALC LEVEL ADJ.
DIN Type 7P JACK
SP 32 Ohm.
SW5 CALL SWITCH
ANT. ROD ANTENNA
J2 EXTERNAL SP.
J4 CHARGER
BATTERY UM-3×8 Ni-Cd×10 12 V DC.
J3 CHARGER
POWER ON-OFF SW2
EXT. POWER
SW-1a
CRYSTAL UNIT (RX)
CRYSTAL UNIT (TX)
SW3 TIMER
PTT. SW3
IC-2 BA-501
IC-2 RC5550H
TR2 2SC1739-P
TR3 2SC1739-P
TR4 2SC1739-P
TR9 2SC1641-R
TR8 2SC1741-Q
TR6 2SC1648-LN
TR7 2SA845-Q
TR5 2SC1648-LN-S
TR10 2SC1739-P
TR17 2SK30A
TR15 2SA854-Q
TR16 2SC1741-Q
TR14 2SA496-Y
TR18 2SC945-Q
TR12 2SC496-Q
TR13 2SC1678
T2 SX-345
T3 4X-1927
T4 4X-1220
T7 SX-345
T8 SKCW-500
CF CFU-455H
M 21A002 260μA 850Ω